Steady State Performance Specifications

(稳态性能指定)

Tracking Error of Two-DOF Controller

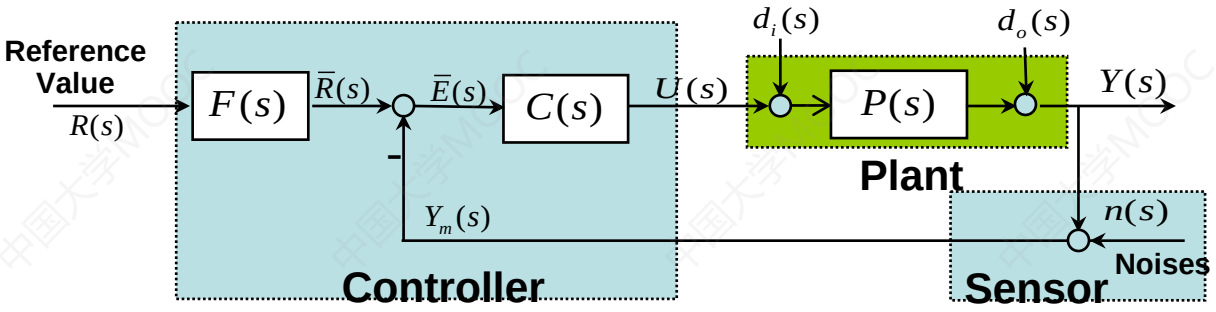

$L(s) = P(s)C(s)$, open-loop TF

- **CL Response in s-Domain** (s域闭环响应)

$$Y(s) = \underbrace{T(s)F(s)}_{T_r(s)} R(s) + S_i(s)d_i(s) + S(s)d_o(s) - T(s)n(s)$$

$$S(s) = \frac{1}{1+L(s)} = \frac{D_p(s)D_c(s)}{D_p(s)D_c(s)+N_p(s)N_c(s)}$$

$$T(s) = \frac{L(s)}{1+L(s)} = \frac{N_p(s)N_c(s)}{D_p(s)D_c(s)+N_p(s)N_c(s)}$$

$$S_i(s) = \frac{P(s)}{1+L(s)} = \frac{N_p(s)D_c(s)}{D_p(s)D_c(s)+N_p(s)N_c(s)}$$

- **Tracking Error in s-Domain** (s域跟踪误差)

$$E(s) = R(s) - Y(s)$$

$$= \underbrace{\left(1-T_r(s)\right)R(s)}_{E_r(s)} \underbrace{-S_i(s)d_i(s)}_{E_{di}(s)} \underbrace{-S(s)d_o(s)}_{E_{do}(s)} \underbrace{+T(s)n(s)}_{E_n(s)}$$

error due to reference input | error due to input disturbance | error due to output disturbance | error due to measurement noise

Steady-State Error in Time Domain

- **Constant Steady-State Error (定常稳态误差)**

  By assuming that conditions of the Final Value Theorem (FVT) are satisfied, i.e., all poles of $sE(s)$ are in LHP, then, the tracking error $e(t)$ converges to the constant steady-state value e_{ss} given by **(假设终值定理条件满足，也就是$sE(s)$的所有极点在左半平面，那么跟踪误差$e(t)$收敛于定常稳态值e_{ss}):**

$$e_{ss} = \lim_{s \to 0} sE(s)$$

- **Steady-State Error for Sinusoidal Inputs (正弦输入的稳态误差)**

$$r(t) = A_r \sin(\omega_r t), \quad d_i(t) = A_{di} \sin(\omega_d t),$$

$$d_o(t) = A_{do} \sin(\omega_d t), \quad n(t) = A_n \sin(\omega_n t)$$

$$\Rightarrow \quad e_{ss}(t) = \underbrace{\left|1 - T_r(j\omega_r)\right| A_r \sin\left(\omega_r t + \angle\left(1 - T_r(j\omega_r)\right)\right)}_{e_{rss}(t)} \underbrace{-\left|S_i(j\omega_d)\right| A_{di} \sin\left(\omega_d t + \angle S_i(j\omega_d)\right)}_{e_{diss}(t)}$$

$$\underbrace{-\left|S(j\omega_d)\right| A_{do} \sin\left(\omega_d t + \angle S(j\omega_d)\right)}_{e_{doss}(t)} \underbrace{+\left|T(j\omega_n)\right| A_n \sin\left(\omega_n t + \angle T(j\omega_n)\right)}_{e_{nss}(t)}$$

System Type With Respect to Reference Inputs

- **System type (系统类型)**

The degree of input polynomial for which the steady-state tracking error is constant (使稳态跟踪误差为常值的输入多项式的阶次).

With respect to reference input **(相对于参考输入)**,

- type 1 system is defined to be the system that the steady-state error e_{rss} due to a ramp reference input $r(t)=t$ is constant **(1型系统被定义成系统稳态误差在斜坡参考输入下是常值).**

-Similarly, type k system is the system that e_{rss} due to a reference input of $r(t)=t^k$ is constant **(类似的，*k*型系统是系统稳态误差在参考输入$r(t)=t^k$下是常值).**

<u>Conditions for Type 2 Systems</u> (2型系统的条件):

$$r(t)=\frac{1}{2}t^2 \quad \Rightarrow \quad R(s)=\frac{1}{s^3}, \quad E(s)=\left(1-T_r(s)\right)R(s)=\frac{1-T_r(s)}{s^3}$$

$$e(t)\xrightarrow{t\to\infty} e_{ss}=\lim_{s\to 0} sE(s)=\lim_{s\to 0}\frac{1-T_r(s)}{s^2}$$

$$\text{Type 2} \quad \Leftrightarrow \quad \text{all poles of } sE(s)=\frac{1-T_r(s)}{s^2} \text{ are in LHP}$$

System Type With Respect to Reference Inputs

Q: If a system is of type 2, is it a type 1 system as well? **(如果是2型系统，那它也是1型系统吗?)**

Yes. If the system is type 2, all poles of $sE(s)=\frac{[1-T_r(s)]}{s^2}$ are in LHP **(是的。如果系统是2型系统，*sE*(*s*)的所有极点都在左半平面)**

$\Longleftrightarrow$ $sE(s)=\frac{s^2\overline{T}_r(s)}{s^2}$, All poles of $\overline{T}_r(s)$ are in LHP**(也就是 $\overline{T}_r(s)$的所有极点都在左半平面)**

For ramp input, all poles of $sE(s)=\frac{[1-T_r(s)]}{s}=s\overline{T}_r(s)$ are in LHP **(对斜坡输入来说，*sE*(*s*)也在左半平面)**

Q: If a system is of type 2, what is the steady-state error for a ramp type reference input? **(如果是2型系统，它对斜坡形式参考输入的稳态误差是什么？)**

$$e_{ss}=\lim_{s\to 0} sE(s)=\lim_{s\to 0}\frac{[1-T_r(s)]}{s}=\lim_{s\to 0}\frac{s^2\overline{T}_r(s)}{s}=\lim_{s\to 0} s\overline{T}_r(s)=0$$

<u>Conditions for Type *k* Systems</u> (*k*型系统的条件):

$$Type\ \ k \quad \Leftrightarrow \quad \text{All poles of } \frac{1-T_r(s)}{s^k} \text{ are in LHP}$$

System Type With Respect to Reference Inputs

For unity feedback, **system type with respect to reference input** is determined by **the number of integrators in its forward path open-loop TF $L(s)$ (对于单位反馈，相对于参考输入的系统类型由其前向开环传递函数的积分项个数决定), i.e.,**
for some k, the system is of type k w.r.t. reference input if (系统相对于参考输入是k型的，如果满足)

$$L(s) = \frac{1}{s^k} L_I(s),\ \ 0 \neq L_I(0) < \infty$$

In addition, the steady-state errors due to various unity polynomial reference inputs are summarized by the following table (各种单位多项式参考输入产生的稳态误差可总结在下表):

	Step (阶跃)	Ramp (斜坡)	Parabola (抛物线型)
Type 0	$1/(1+K_p)$	∞	∞
Type 1	0	$1/K_v$	∞
Type 2	0	0	$1/K_a$

System Type With Respect to Reference Inputs

Type 0: SS Error due to unit step reference input (单位阶跃参考输入引起的稳态误差)

$$r(t)=1,\quad R(s)=\frac{1}{s} \quad\Rightarrow\quad E(s)=\frac{1}{1+L(s)}R(s)=\frac{1}{1+L(s)}\cdot\frac{1}{s} \quad\Rightarrow\quad e_{rss}=\lim_{s\to 0} sE_r(s)=\lim_{s\to 0}\frac{1}{1+L(s)}=\frac{1}{1+K_p}$$

where $K_p \equiv L(0)$ position error constant (位置误差系数)

Type 1: SS error due to unit ramp input (单位斜坡参考输入引起的稳态误差)

$$r(t)=t,\quad R(s)=\frac{1}{s^2} \quad\Rightarrow\quad e_{rss}=\lim_{s\to 0} s\frac{1}{1+L(s)}\frac{1}{s^2}=\lim_{s\to 0}\frac{1}{s+sL(s)}=\frac{1}{K_v}$$

where $K_v \equiv \lim_{s\to 0} sL(s)=L_I(0)$ velocity constant (速度系数)

Type 2: SS error due to unit parabolic input (单位二次项参考输入引起的稳态误差)

$$r(t)=\frac{1}{2}t^2,\quad R(s)=\frac{1}{s^3} \quad\Rightarrow\quad e_{rss}=\lim_{s\to 0} s\frac{1}{1+L(s)}\frac{1}{s^3}=\lim_{s\to 0}\frac{1}{s^2+s^2L(s)}=\frac{1}{K_a}$$

where $K_a \equiv \lim_{s\to 0} s^2L(s)=L_I(0)$ acceleration constant (加速度系数)

System Type wrt Input Disturbances

A type 1 system with respect to input disturbance is defined to be the system that the steady-state error e_{diss} due to a ramp input disturbance of $d(t)=t$ is constant **(相对于输入干扰的1型系统被定义成因斜坡输入干扰引起的稳态误差是常值的)**.

Similarly, a type k system with respect to input disturbance is the system that the steady state error e_{diss} due to an input disturbance of $d(t)=t^k$ is constant **(类似的，相对于输入干扰的*k*型系统被定义成因输入干扰*d(t)=t* ^{k}引起的稳态误差是常值的)**.

<u>Conditions for Type 2 Systems</u> (2型系统的条件):

$$d_i(t)=\frac{1}{2}t^2,\quad d_i(s)=\frac{1}{s^3},\quad E_{di}(s)=-S_i(s)d_i(s)=-\frac{1}{s^3}S_i(s)$$

$$Type\ \ 2 \ \Leftrightarrow\ \text{All poles of } \frac{S_i(s)}{s^2} \text{ are in LHP}$$

<u>Conditions for Type *k* Systems</u> (*k*型系统的条件):

$$S_i(s)=\frac{P(s)}{1+P(s)C(s)}=\frac{N_p(s)D_c(s)}{D_p(s)D_c(s)+N_p(s)N_c(s)}$$

$$\Rightarrow\quad e_{diss}=\lim_{s\to 0}sE_{di}(s)=\lim_{s\to 0}-\frac{S_i(s)}{s^k}=-\frac{N_p(0)}{D_p(0)D_c(0)+N_p(0)N_c(0)}\lim_{s\to 0}\frac{1}{s^k}D_c(s)=-\frac{1}{N_c(0)}\lim_{s\to 0}\frac{1}{s^k}D_c(s)$$

System Type wrt Input Disturbance

For unity feedback systems, system type with respect to input disturbance is determined by **the number of integrators in its feedback path open-loop TF** $C(s)$ **(对于单位反馈，相对于输入干扰的系统类型由其反馈开环传递函数*C(s)*的积分项个数决定), i.e., for some k, the system is of type k w.r.t. input disturbance, if (如果式中有一些*k*，则系统相对于输入干扰是*k*型的,如果满足)**

$$C(s) = \frac{1}{s^k} C_I(s),\ 0 \neq C_I(0) < \infty$$

In addition, the steady-state errors for unity polynomial input disturbances are summarized by the following table **(因各种单位多项式输入干扰产生的稳态误差可总结在下表)**

	Step	Ramp	Parabola
Type 0	$-1/K_{dp}$	∞	∞
Type 1	0	$-1/K_{dv}$	∞
Type 2	0	0	$-1/K_{da}$

where

$K_{dp} = C(0) + \frac{1}{P(0)}$ input disturbance position constant **(输入干扰位置系数)**

$K_{dv} = \lim_{s\to 0} sC(s) = C_I(0)$ input disturbance velocity constant **(输入干扰速度系数)**

$K_{da} = \lim_{s\to 0} s^2 C(s) = C_I(0)$ input disturbance acceleration constant **(输入干扰加速度系数)**

System Type wrt Output Disturbances

A type 1 system with respect to output disturbance is defined to be the system that the steady-state error e_{doss} due to a ramp output disturbance of $d(t)=t$ is constant **(相对于输出干扰的1型系统被定义成因斜坡输出干扰引起的稳态误差是常值的)**.

Similarly, a type k system with respect to output disturbance is the system that the steady state error e_{doss} due to an output disturbance of $d(t)=t^k$ is constant **(类似的，相对于输出干扰的*k*型系统是因输出干扰*r(t)=t* ^{k}引起的系统稳态误差是常值)**.

Conditions for Type 2 Systems (2型系统的条件):

$$d_o(t)=\frac{1}{2}t^2,\quad d_o(s)=\frac{1}{s^3},\quad E_{do}(s)=-S(s)d_o(s)=-\frac{1}{s^3}S(s)$$

$$Type\ \ 2 \ \Leftrightarrow\ \text{All poles of } \frac{S(s)}{s^2} \text{ are in LHP}$$

Conditions for Type k Systems (*k*型系统的条件):

$$S(s)=\frac{1}{1+P(s)C(s)}=\frac{D_p(s)D_c(s)}{D_p(s)D_c(s)+N_p(s)N_c(s)}$$

$$e_{diss}=\lim_{s\to 0} sE_{do}(s)=\frac{S(s)}{s^k}$$

$$=-\frac{1}{D_p(0)D_c(0)+N_p(0)N_c(0)}\lim_{s\to 0}\frac{1}{s^k}D_p(s)D_c(s)=-\frac{1}{N_p(0)N_c(0)}\lim_{s\to 0}\frac{1}{s^k}D_p(s)D_c(s)$$

System Type wrt Output Disturbance

For unity feedback systems, **system type with respect to output disturbance** is determined by **the number of integrators in its feedback path open-loop TF $L(s)$ (对于单位反馈，相对于输出干扰的系统类型由其反馈开环传递函数$L(s)$的积分项个数决定), i.e., for some k, the system is of type k w.r.t. output disturbance, if (系统相对于输出干扰是k型的,如果满足)**

$$L(s) = \frac{1}{s^k} L_I(s),\ \ 0 \neq L_I(0) < \infty$$

In addition, the steady-state errors for unity polynomial output disturbances are summarized by the following table (各种单位多项式输出干扰产生的稳态误差可总结在下表)

	Step	Ramp	Parabola
Type 0	$-1/(1+K_p)$	∞	∞
Type 1	0	$-1/K_{dv}$	∞
Type 2	0	0	$-1/K_{da}$

where

$K_p = L(0)$ position error constant (位置误差系数)

$K_{dv} = \lim_{s\to 0} sL(s) = L_I(0)$ velocity error constant (速度误差系数)

$K_{da} = \lim_{s\to 0} s^2 L(s) = L_I(0)$ acceleration error constant (加速度误差系数)

Ex: System Types for a DC Motor Control

Consider the simplified model of the DC motor employing a proportional feedback as shown below (考虑采用比例反馈控制的直流电机驱动系统):

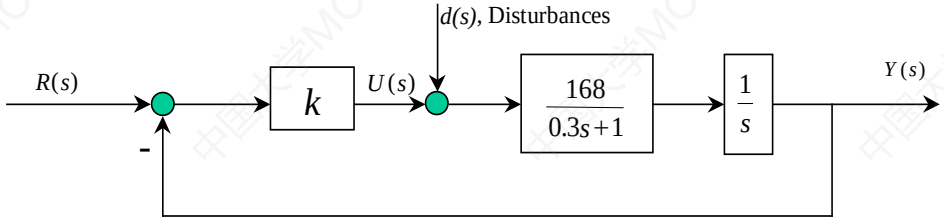

$$C(s)=K\ ,\ P(s)=\frac{168}{s(0.3s+1)}$$

$$L(s)=C(s)P(s)=\frac{168k}{s(0.3s+1)}$$

- **System Type wrt Reference Input (相对于参考输入的系统类型):** **Type 1**
  - The steady-state error due to a step or constant reference input (因阶跃或常值参考输入引起的稳态误差):

$$e_{ss}=\lim_{s\to 0} s\,E(s)=\lim_{s\to 0} s[1-T(s)]\frac{1}{s}=\lim_{s\to 0}\frac{s(0.3s+1)}{s(0.3s+1)+168k}=0$$

0

- **System Type wrt Input Disturbances (相对于输入干扰的系统类型):** **Type 0**
  - The steady-state error due to unit constant disturbances (因单位常值输入干扰引起的稳态误差):

$$e_{ss}=\lim_{s\to 0} s\,E(s)=\lim_{s\to 0} s[-S_i(s)]\frac{1}{s}=-\lim_{s\to 0}\frac{168}{s(0.3s+1)+168k}=-\frac{1}{k}$$

$$-1/K_{dp}\quad \text{with}\quad K_{dp}=C(0)+\frac{1}{P(0)}$$

  - The steady-state error due to polynomial disturbances (因单位多项式输入干扰引起的稳态误差):

$$e_{ss}=\lim_{s\to 0} s\,E(s)=\lim_{s\to 0} s[-S_i(s)]\frac{N_{dis}(s)}{D_{dis}(s)}=-\lim_{s\to 0}\frac{168}{s(0.3s+1)+168k}\lim_{s\to 0} s\frac{N_{dis}(s)}{D_{dis}(s)}=-\frac{1}{k}\lim_{s\to 0} s\frac{N_{dis}(s)}{D_{dis}(s)}=\begin{cases}-\dfrac{1}{k}, & n=1\\ \infty, & n>1\end{cases}$$

Performance Specifications

With a two DOF controller, the closed-loop system response is **(二自由度控制器的闭环系统的响应是)**:

$$Y(s) = T_r(s)R(s) + S_i(s)d_i(s) + S(s)d_o(s) - T(s)n(s)$$

The objective of control system design is to choose the controller TF $C(s)$ and $F(s)$ such that certain performance (design) specifications are met **(控制系统设计的目标是选择控制器传递函数*C*(*s*) 和*F*(*s*)以满足指定的设计性能)**. We want:

(i) The output $y(t)$ to follow the reference input $r(t)$ **(输出跟踪参考输入)**

This is equivalent to specifying that **(等效于指定)**

Ideally, want **(理想希望)**

$$T_r(s) \equiv 1$$

In reality, try to achieve **(实际尝试获得)**

$$T_r(j\omega) \approx 1, \quad \omega \in \underbrace{\left[\omega_{low}, \quad \omega_{high}\right]}_{\text{Frequency Range of Ref. Input}}$$

Performance Specifications

With a two DOF controller, the closed-loop system response is (二自由度控制器的闭环系统的响应是):

$$Y(s) = T_r(s)R(s) + S_i(s)d_i(s) + S(s)d_o(s) - T(s)n(s)$$

(ii) The disturbances to have very little effect on the output $y(t)$ within the frequency range where disturbances are most likely to occur (在干扰易发生的频段上干扰对输出的影响较小)

This is equivalent to specifying that (等效于指定)

Ideally, want (理想希望)

$$S(s) \equiv 0$$

In reality, try to achieve (实际尝试获得)

$$S(j\omega) \approx 0, \quad \omega \in \underbrace{\left[\omega_{d_low}, \quad \omega_{d_high}\right]}_{\text{Frequency Range of Disturbances}}$$

(iii) The noise to have very little effect on the output $y(t)$ within the frequency range where noises are most likely to occur (在噪声易发生的频段上噪声对输出的影响较小)

This is equivalent to specifying that (等效于指定)

Ideally, want (理想希望)

$$T(s) \equiv 0$$

In reality, try to achieve(实际尝试获得)

$$T(j\omega) \approx 0, \quad \omega \in \underbrace{\left[\omega_{n_low}, \quad \infty\right]}_{\text{Frequency Range of Noises}}$$

Steady-State Performance Specifications

- **When Dealing with Polynomial Type Inputs in Time-Domain**

(在时域处理多项式形式的输入时)

Specific requirements on the system types and the corresponding error constants **(指定对系统类型和相应误差常数的要求).**

➢For constant reference input $r(t)=r_{ss}$, the steady state response $y_{SS}(t)$ to be within an $X\%$ band of the reference input $r(t)$, i.e **(相对于常值参考输入，稳态响应必须在参考输入值的 $X\%$阈值内)**:

$$\left|\frac{r(t)-y_{SS}(t)}{r(t)}\right| \le X\% \quad \Rightarrow \quad \left|\frac{r_{ss}-T_r(0)r_{ss}}{r_{ss}}\right| < X\% \quad \Leftrightarrow \quad 1-X\% < T_r(0) < 1+X\%$$

or equivalently, the system type w.r.t. reference input should be at least type 0 with the position error constant no less than some value **(或者说，相对参考输入的系统类型应当至少为0，其位置误差常数不小于某值)**:

$$\left|\frac{1}{1+K_p}\right| < X\% \quad \Leftrightarrow \quad K_p > \frac{1}{X\%}-1$$

➢For unit ramp reference input $r(t)=t$: the system type w.r.t. reference input should be at least type 1 with the position error constant no less than some value **(对于斜坡参考输入，相对于参考输入的系统类型应当至少为1，其速度误差常数不小于某值)**:

$$\left|\frac{1}{K_v}\right| < X\% \quad \Leftrightarrow \quad K_v > \frac{1}{X\%}$$

Steady-State Performance Specifications

- **When Dealing with Sinusoidal Type Inputs in Frequency-Domain (在频域处理正弦形式的输入时)**

Specific requirements on the CL frequency responses **(指定闭环频率响应的要求) .**

- The steady-state error $e_{SS}(t)$ to track a reference input of $r(t) = A_r \sin(\omega_r t)$ should be within $X\%$ **(对跟踪参考输入的稳态误差应当在$X\%$以内)**:

$$e_{rss}(t) = \left|1 - T_r(j\omega_r)\right| A_r \sin\left(\omega_r t + \angle\left(1 - T_r(j\omega_r)\right)\right) \quad \Rightarrow \quad \left|1 - T_r(j\omega_r)\right| < X\%$$

- The input disturbance of $d_i(t) = A_{di} \sin(\omega_d t)$ should be attenuated by a factor of γ **(输入干扰应当被抑制减小γ倍)**:

$$e_{diss}(t) = -\left|S_i(j\omega_d)\right| A_{di} \sin\left(\omega_d t + \angle S_i(j\omega_d)\right) \quad \Rightarrow \quad \left|S_i(j\omega_d)\right| < \frac{1}{\gamma}$$

- The output disturbance of $d_o(t) = A_{do} \sin(\omega_d t)$ should be attenuated by a factor of γ **(输出干扰应当被抑制减小γ倍)**:

$$e_{doss}(t) = -\left|S(j\omega_d)\right| A_{do} \sin\left(\omega_d t + \angle S(j\omega_d)\right) \quad \Rightarrow \quad \left|S(j\omega_d)\right| < \frac{1}{\gamma}$$

- The noise of $n(t) = A_n \sin(\omega_n t)$ should be attenuated by a factor of γ **(噪声应当被抑制减小γ倍)**:

$$e_{nss}(t) = -\left|T(j\omega_n)\right| A_n \sin\left(\omega_n t + \angle T(j\omega_n)\right) \quad \Rightarrow \quad \left|T(j\omega_n)\right| < \frac{1}{\gamma}$$

Summary

- **Steady State Performance Specifications (稳态性能指定)**
  - Steady-State Errors (稳态误差)
  - Following Polynomial Inputs and System Type (time-domain method) (跟踪多项式形式的输入和系统类型(时域方法))
  - Following Sinusoidal Inputs at Low Frequency (frequency domain method) (在低频段跟踪正弦形式输入(频域方法))